Rove Concepts

Arya Armless

Recline into a unity of contemporary design and minimalist values with the Arya Modular collection. A plush back and seat elegantly curves inwards, brimming with layers of high-density cushioning. Uncluttered and endlessly inviting, this piece offers a deep seat and angled back to take advantage of a clean design and tempting cushions. The Arya Modular collection embodies the fundamental elements of modern design and effortlessly adds sleekness to any space.

See the entire Arya Collection here.

Also available in a modular sectional here.

Details

- Kiln-dried hardwood frame with doweled joints and reinforced corner blocks
- Soft-padded frame made with polyurethane foam wrapped in polyester fiber
- 8 gauge sinuous spring construction
- 3 layer high-density foam cushioning
- Low profile legs
- Connectors are not used with this piece
- Throw cushions not included
- Medium-Firm Feel (Learn more about our sofa firmness here.)
- Legs require light assembly

Dimensions
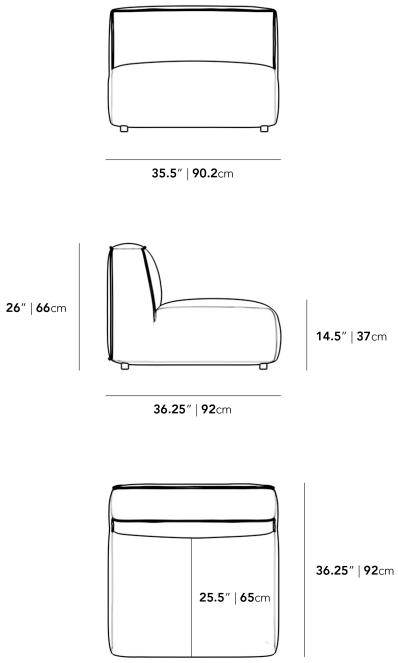
36.2 in x 35.4 in x 26 in (Width x Depth x Height)
Seat Height: 14.5 in
All measurements are approximations.