Rove Classics

Tulip Table Round - Lacquer

The Tulip Table series is a premium reproduction line inspired by Finnish and American mid-century architecture, a period vastly characterised by the simplification of everyday living. The unique single pedestal base is made from strong cast aluminum to support a heavy top whilst eliminating the unnecessary clutter of legs underneath.

Details

This premium Rove Classics reproduction features:

- Lacquer top with satin finish
- California Phase 2 Compliant MDF
- Beveled underside edge
- Cast aluminum base with gloss finish
- Base has 5-step powder coat resistant to chipping
- Round shape
- Assembly is required
- Diameter may vary by approximately 0.5"
- This product will be shipped in a wooden crate, tools are recommended for unboxing

This item is not manufactured by or affiliated with the original designer(s) and associated parties.

Dimensions

39.5 in x 39.5 in x 28.5 in (Width x Depth x Height)

Additional Dimensions
47.25 in x 47.25 in x 28.5 in - (48" | 122cm Size, White Lacquer Veneer Finishes, Black Base Options)
47.25 in x 47.25 in x 28.5 in - (48" | 122cm Size, White Lacquer Veneer Finishes, White Base Options)

All measurements are approximations.
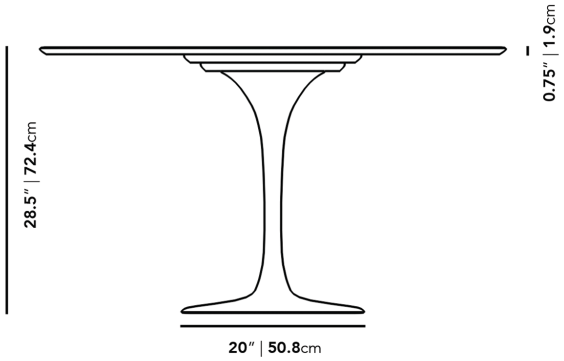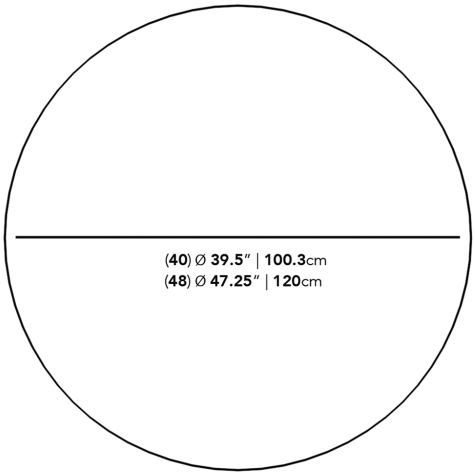
Assembly Instructions
Download