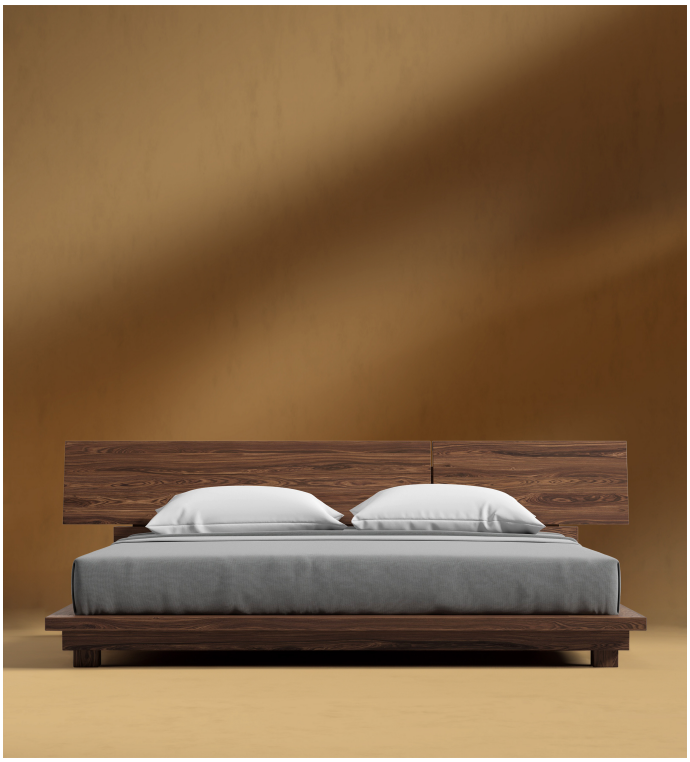

Rove Concepts

Hunter Bed

Hunter's handsome frame and choice of dreamy American walnut veneer or ash veneer are reminiscent of a modern cabin. The wide and low profile adds casual comfort to a good night, with a generous headboard composed of three sections. The low part joins seamlessly at the base of the frame, while the top portion of the extended headboard leans slightly back to collect all angles of comfort towards the center. The extended panels of the headboard are designed specifically for fitting complimentary nightstands under its wing, available in matching American walnut, ash veneer, or high gloss white lacquer for an unexpectedly cool contrast. Hunter is part of a four-piece modern bedroom set and is available in King or Queen.

Details

- Smooth American walnut veneer or ash veneer
- California Phase 2 Compliant MDF
- Standard quality framing is secured with strong metal brackets
- European flexible slat system included
- Special frame design built for compatibility with matching night stands
- Approximately 1.7 inch mattress inset
- Assembly required

*Mattress shown in images is 10" thick

Dimensions

96 in x 91.8 in x 35 in (Width x Depth x Height)
All measurements are approximations.
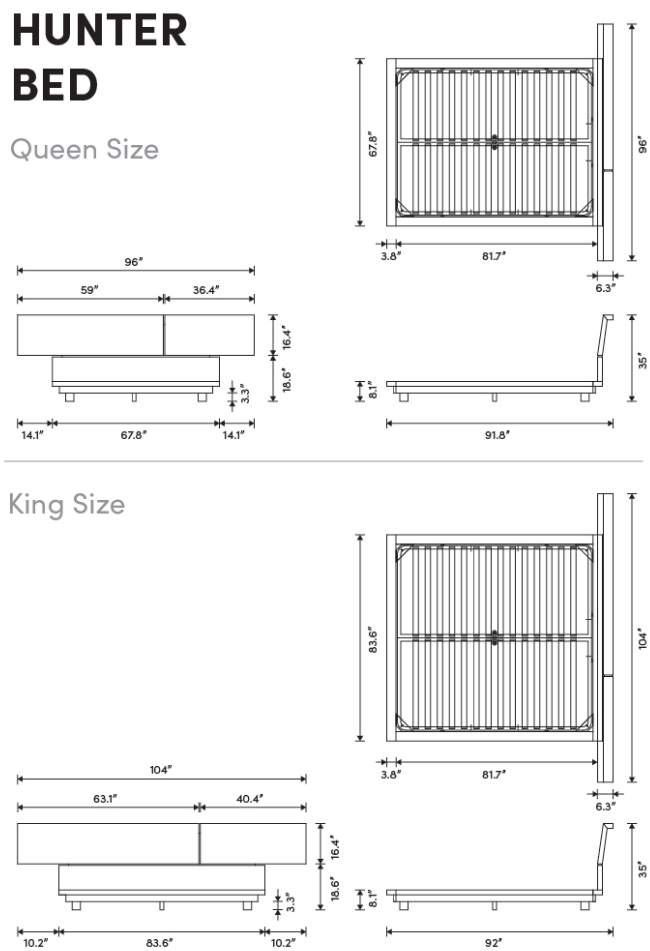
Assembly Instructions
Download